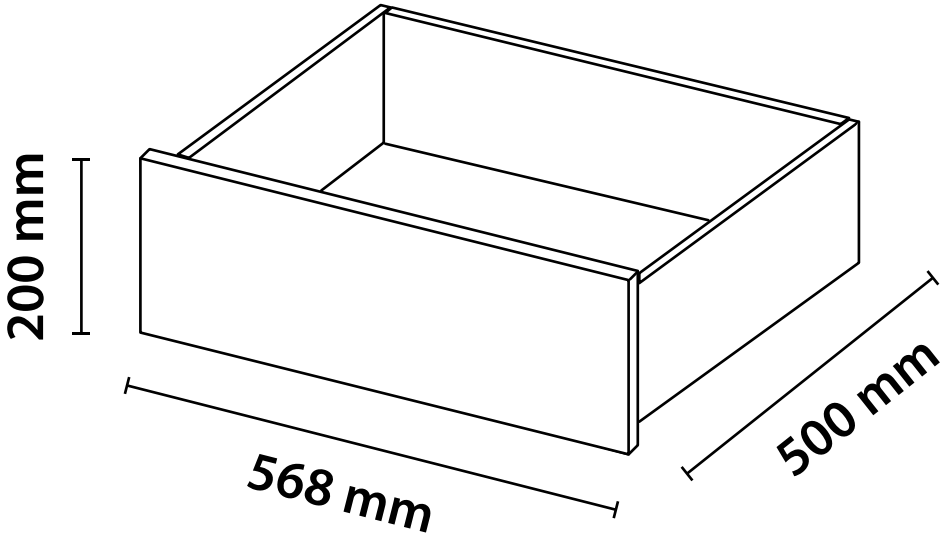
200 mm
568 mm
500 mm